佳邦科技股份有限公司
INPAQ TECHNOLOGY CO., LTD.

PSMCJ-T Series

Specification

Product Name	Power TVS (Transient Voltage Suppressor)
Series	PSMCJ-T Series
Package Size	SMC (DO214-AB)

PSMCJ-T Series Engineering Specification

1. FEATURES

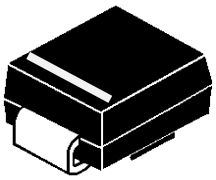
Uni-directional

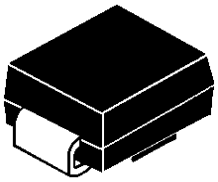
Bi-directional

- 1500W Surface Mount Transient Voltage Suppressors
- Glass passivated chip junction
- For surface mounted applications
- Reliable low cost construction utilizing molded plastic technique
- Excellent clamping capability
- Reliable low cost construction utilizing molded plastic technique
- Plastic material has UL flammability classification 94V-O
- Fast response time
- RoHS compliant

2.MECHANICAL CHARACTERISTICS

- Case : Molded plastic
- Case Material: Molding compound, UL Flammability classification 94V-0, (No Br. Sb. Cl.) "Halogen-free".
- Polarity : by cathode band denotes uni-directional device none cathode band denotes bi-directional device

3. Specifications

3.1Maximum Ratings and Characteristics @ 25°C Ambient Temperature (unless otherwise noted)

Parameter	Symbol	Value	Units
Peak Power Dissipation (Note 1.) @TL = 25°C, Pulse Width = 1 ms	PPK	1500	W
Forward Surge Current (Note 2.) @TA = 25°C	IFSM	200	A
Power Dissipation On Infinite Heatsink, @TA = 50°C	PM(AV)	5	W
Thermal Resistance Junction To Ambient Air (Note 3.)	RθJA	75	°C/W
Thermal Resistance Junction To Leads	RθJL	15	°C/W
Storage Temperature Range	TSTG	-55 to 150	°C
Operating Junction Temperature Range	TJ	-55 to 150	°C

(1) 10 X 1000 us, non–repetitive
(2) 1/2 sine wave (or equivalent square wave), PW = 8.3ms, duty cycle = 4 pulses per minute maximum
(3) Mounted on minimum recommended pad layout

3.2 Electrical Specification @ Tamb 25°C

Part Number		Marking		Reverse Stand off Voltage VR	Breakdown Voltage VBR (Volts) @ IT			Maximum Clamping Voltage VC @ IPP	Maximum Peak Pulse Current IPP	Maximum Reverse Leakage IR @ VR
Uni	Bi	Uni	Bi	(Volts)	MIN	MAX	(mA)	(Volts)	(A)	(μA)
PSMCJ6.8A-T	PSMCJ6.8CA-T	6V8A	6V8CA	5.8	6.45	7.14	10	10.5	144.8	500
PSMCJ7.5A-T	PSMCJ7.5CA-T	7V5A	7V5CA	6.4	7.13	7.88	10	11.3	134.5	500
PSMCJ8.2A-T	PSMCJ8.2CA-T	8V2A	8V2CA	7.02	7.79	8.61	10	12.1	125.6	200
PSMCJ9.1A-T	PSMCJ9.1CA-T	9V1A	9V1CA	7.78	8.65	9.55	1	13.4	113.4	50
PSMCJ10A-T	PSMCJ10CA-T	10A	10CA	8.55	9.5	10.5	1	14.5	104.8	10
PSMCJ11A-T	PSMCJ11CA-T	11A	11CA	9.4	10.5	11.6	1	15.6	97.4	5
PSMCJ12A-T	PSMCJ12CA-T	12A	12CA	10.2	11.4	12.6	1	16.7	91	5
PSMCJ13A-T	PSMCJ13CA-T	13A	13CA	11.1	12.4	13.7	1	18.2	83.5	5
PSMCJ15A-T	PSMCJ15CA-T	15A	15CA	12.8	14.3	15.8	1	21.2	71.7	5
PSMCJ16A-T	PSMCJ16CA-T	16A	16CA	13.6	15.2	16.8	1	22.5	67.6	5
PSMCJ18A-T	PSMCJ18CA-T	18A	18CA	15.3	17.1	18.9	1	25.2	60.3	5
PSMCJ20A-T	PSMCJ20CA-T	20A	20CA	17.1	19	21	1	27.7	54.9	5
PSMCJ22A-T	PSMCJ22CA-T	22A	22CA	18.8	20.9	23.1	1	30.6	49.7	5
PSMCJ24A-T	PSMCJ24CA-T	24A	24CA	20.5	22.8	25.2	1	33.2	45.8	5
PSMCJ27A-T	PSMCJ27CA-T	27A	27CA	23.1	25.7	28.4	1	37.5	40.5	5
PSMCJ30A-T	PSMCJ30CA-T	30A	30CA	25.6	28.5	31.5	1	41.4	36.7	5
PSMCJ33A-T	PSMCJ33CA-T	33A	33CA	28.2	31.4	34.7	1	45.7	33.3	5
PSMCJ36A-T	PSMCJ36CA-T	36A	36CA	30.8	34.2	37.8	1	49.9	30.5	5
PSMCJ39A-T	PSMCJ39CA-T	39A	39CA	33.3	37.1	41	1	53.9	28.2	5
PSMCJ43A-T	PSMCJ43CA-T	43A	43CA	36.8	40.9	45.2	1	59.3	25.6	5
PSMCJ47A-T	PSMCJ47CA-T	47A	47CA	40.2	44.7	49.4	1	64.8	23.5	5
PSMCJ51A-T	PSMCJ51CA-T	51A	51CA	43.6	48.5	53.6	1	70.1	21.7	5
PSMCJ56A-T	PSMCJ56CA-T	56A	56CA	47.8	53.2	58.8	1	77	19.7	5
PSMCJ62A-T	PSMCJ62CA-T	62A	62CA	53	58.9	65.1	1	85	17.9	5
PSMCJ68A-T	PSMCJ68CA-T	68A	68CA	58.1	64.6	71.4	1	92	16.5	5
PSMCJ75A-T	PSMCJ75CA-T	75A	75CA	64.1	71.3	78.8	1	103	14.8	5
PSMCJ82A-T	PSMCJ82CA-T	82A	82CA	70.1	77.9	86.1	1	113	13.5	5
PSMCJ91A-T	PSMCJ91CA-T	91A	91CA	77.8	86.5	95.5	1	125	12.2	5
PSMCJ100A-T	PSMCJ100CA-T	100A	100CA	85.5	95	105	1	137	11.1	5

Part Number		Marking		Reverse Stand off Voltage VR	Breakdown Voltage VBR (Volts) @ IT			Maximum Clamping Voltage VC @ IPP	Maximum Peak Pulse Current IPP	Maximum Reverse Leakage IR @ VR
Uni	Bi	Uni	Bi	(Volts)	MIN	MAX	(mA)	(Volts)	(A)	(μA)
PSMCJ110A-T	PSMCJ110CA-T	110A	110CA	94	105	116	1	152	10	5
PSMCJ120A-T	PSMCJ120CA-T	120A	120A	102	114	126	1	165	9.2	5
PSMCJ130A-T	PSMCJ130CA-T	130A	130CA	111	124	137	1	179	8.5	5
PSMCJ150A-T	PSMCJ150CA-T	150A	150CA	128	143	158	1	207	7.3	5
PSMCJ160A-T	PSMCJ160CA-T	160A	160CA	136	152	168	1	219	6.9	5
PSMCJ170A-T	PSMCJ170CA-T	170A	170CA	145	162	179	1	234	6.5	5
PSMCJ180A-T	PSMCJ180CA-T	180A	180CA	154	171	189	1	246	6.2	5
PSMCJ200A-T	PSMCJ200CA-T	200A	200A	171	190	210	1	274	5.5	5
PSMCJ220A-T	PSMCJ220CA-T	220A	220CA	185	209	231	1	328	4.6	5
PSMCJ250A-T	PSMCJ250CA-T	250A	250CA	214	237	263	1	344	4.4	5
PSMCJ300A-T	PSMCJ300CA-T	300A	300CA	256	285	315	1	414	3.7	5
PSMCJ350A-T	PSMCJ350CA-T	350A	350CA	300	332	368	1	482	3.2	5
PSMCJ400A-T	PSMCJ400CA-T	400A	400CA	342	380	420	1	548	2.8	5
PSMCJ440A-T	PSMCJ440CA-T	440A	440CA	376	418	462	1	602	2.5	5

※ For Bi-directional type having VRWM of 10 Volts and less, the IR limit is double

1. A transient suppressor is normally selected according to the working peak reverse voltage (VRWM), which should be equal to or greater than the DC or continuous peak operating voltage level.
2. VBR measured at pulse test current IT at an ambient temperature of 25°C.
3. Surge current waveform per Figure 1 and derate per Figure 3.

4. Typical Characteristics

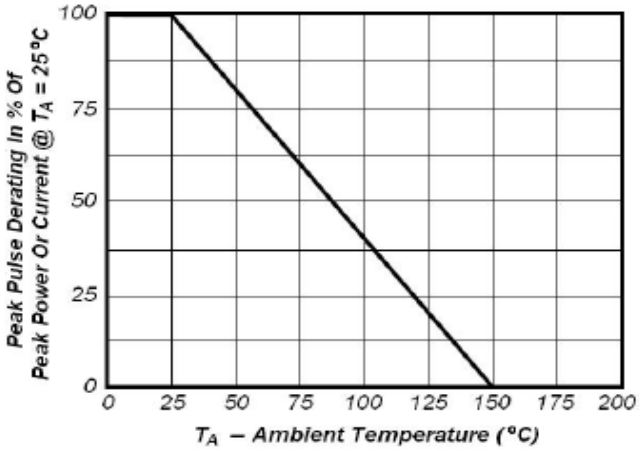

Fig1. Pulse Dearting Curve

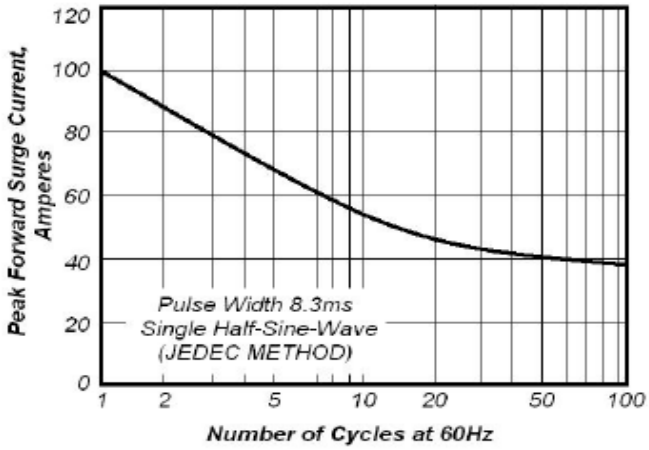

Fig2. Maximum Non-Repetitive Peak Forward Surge Current

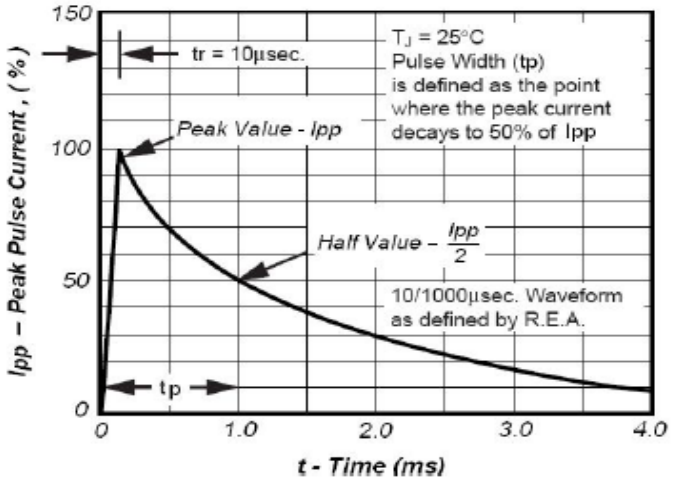

Fig3. Pulse Waveform

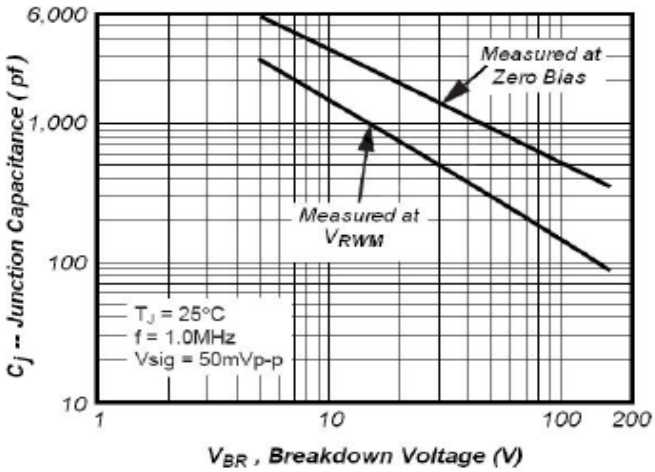

Fig4. Typical Junction Capacitance

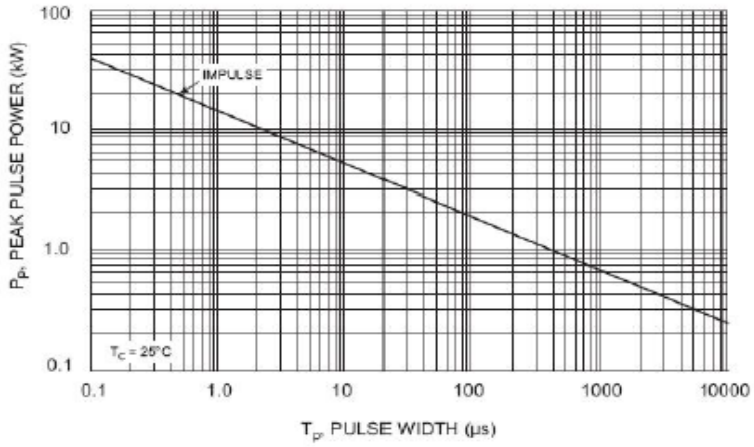

Fig5. Peak Pulse Power Rating curve

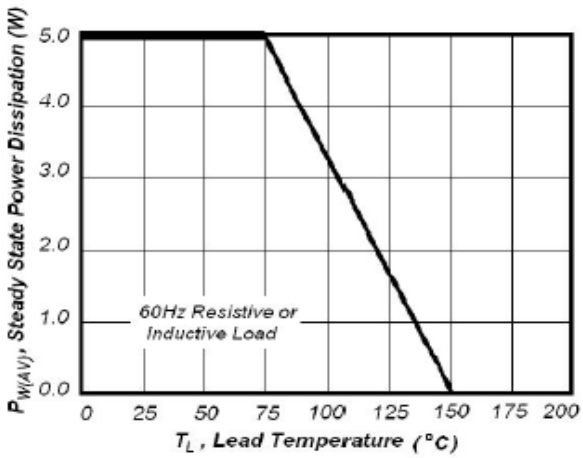

Fig6. Steady State Power

5. Reflow soldering

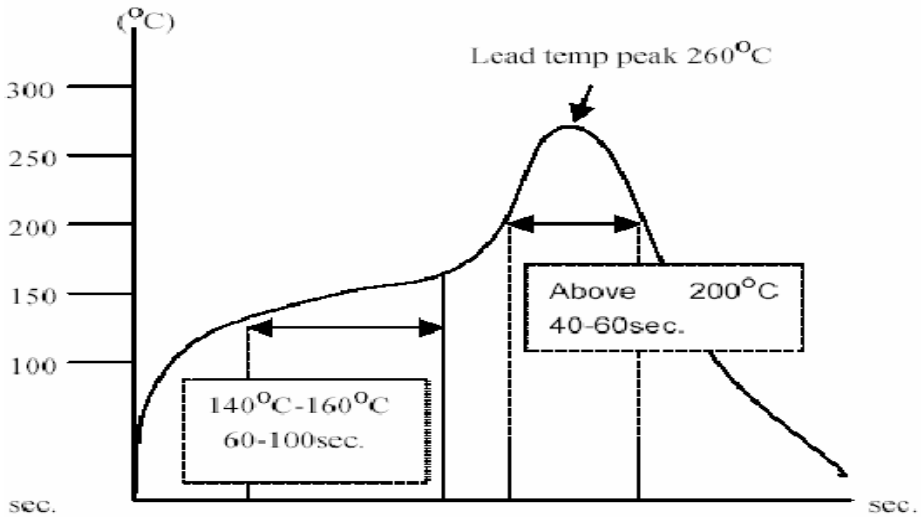

6. Dimension

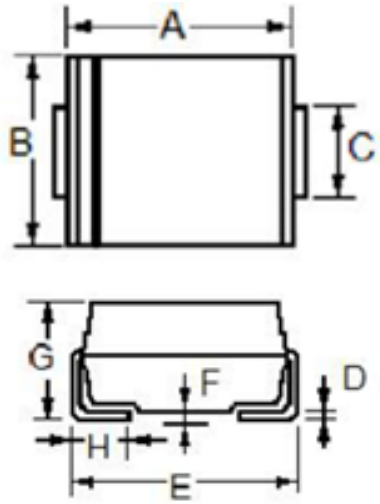

Dim	Millimeters		Inches	
	Min	Max	Min	Max
A	6.600	7.110	0.260	0.280
B	5.590	6.220	0.220	0.245
C	2.900	3.200	0.114	0.126
D	0.125	0.305	0.006	0.012
E	7.750	8.130	0.305	0.320
F	-	0.203	-	0.008
G	2.060	2.620	0.079	0.103
H	0.760	1.520	0.030	0.060

7. Carrier tape size

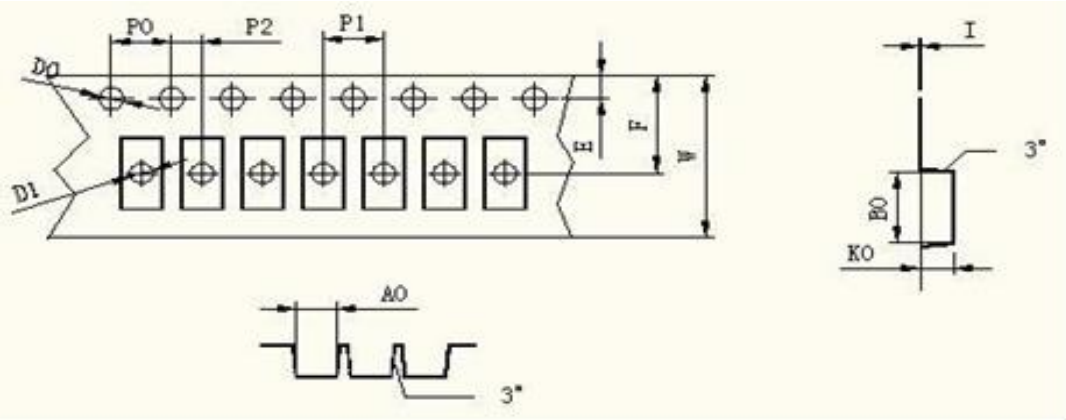

8. Marking Code

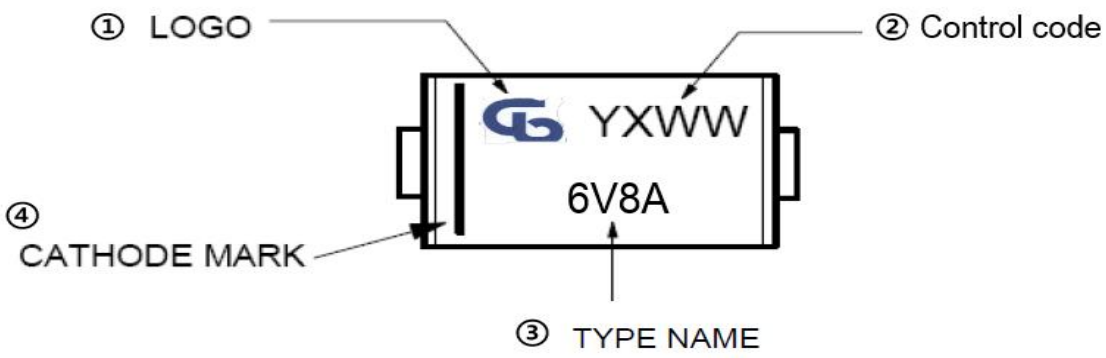

1. INPAQ LOGO
2. CONTROL CODE
3. TYPE NAME (By Device Marking Code)
4. CATHODE MARK (For Uni-direction Products Only)

9. PACKING

DEVICE TYPE	Q'TY/REEL (pcs)	REEL DIA. (mm)/(inch)
PSMCJ-T Series	3000	330/13”