佳邦科技股份有限公司
INPAQ TECHNOLOGY CO., LTD.

SMFJ-T Series

Specification

Product Name	Power TVS (Transient Voltage Suppressor)
Series	SMFJ-T Series
Package Size	DO219(SOD123-FL)

SMFJ-T Series Engineering Specification

1. FEATURES

- 200W Surface Mount Transient Voltage Suppressors
- Glass passivated chip junction
- For surface mounted applications
- Reliable low cost construction utilizing molded plastic technique
- Plastic material has UL flammability classification 94V-O
- Typical IR less than 1uA above 10V
- Fast response time
- RoHS compliant
- IEC 61000-4-2 ESD 30KV(Air), 30KV(Contact)

Bi-directional

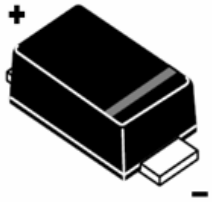

Uni-directional
(SOD-123)

2. MECHANICAL DATA

- Case : Molded plastic
- Case Material: Molding compound, UL Flammability classification 94V-0, (No Br. Sb. Cl.) "Halogen free".
- Polarity : by cathode band denotes uni-directional device none cathode band denotes bi-directional device

3. Specifications

3.1 Maximum Ratings and Characteristics @ 25°C Ambient Temperature (unless otherwise noted)

Parameter	Symbol	Value	Units
Peak Power Dissipation (Note 1.) @T_L = 25°C, Pulse Width = 1 ms	P_{PK}	200	W
Forward Surge Current (Note 2.) @T_A = 25°C	I_{FSM}	100	A
Power Dissipation On Infinite Heatsink, @T_A = 50°C	$P_{M(AV)}$	5.0	W
Thermal Resistance Junction To Ambient Air (Note 3.)	$R_{\theta JA}$	100	°C/W
Thermal Resistance Junction To Leads	$R_{\theta JL}$	20	°C/W
Storage Temperature Range	T_{STG}	-55 to 150	°C
Operating Junction Temperature Range	T_J	-55 to 150	°C

(1) 10 X 1000 us, non–repetitive
(2) 1/2 sine wave (or equivalent square wave), PW = 8.3ms, duty cycle = 4 pulses per minute maximum
(3) Mounted on minimum recommended pad layout

3.2 Electrical Specification @ Tamb 25°C

Part Number		Device Marking Code		Reverse Stand off Voltage VR	Breakdown Voltage VBR(Volts) @ IT		Test Current IT	Maximum Clamping Voltage VC @ IPP	Maximum Peak Pulse Current IPP	Maximum Reverse Leakage IR @ VR
UNI	BI	UNI	BI	(Volts)	MIN	MAX	(mA)	(Volts)	(A)	(μA)
SMFJ5.0A-T	SMFJ5.1CA-T	5.0A	5.0CA	5	6.4	7.07	10	9.6	20.8	100
SMFJ6.0A-T	SMFJ6.0CA-T	6.0A	6.0CA	6	6.67	7.37	10	10.3	19.4	100
SMFJ6.5A-T	SMFJ6.5CA-T	6.5A	6.5CA	6.5	7.22	7.98	10	11.2	17.9	50
SMFJ7.0A-T	SMFJ7.0CA-T	7.0A	7.0CA	7	7.78	8.6	10	12	16.7	30
SMFJ7.5A-T	SMFJ7.5CA-T	7.5A	7.5CA	7.5	8.33	9.21	1	12.9	15.5	30
SMFJ8.0A-T	SMFJ8.0CA-T	8.0A	8.0CA	8	8.89	9.83	1	13.6	14.7	10
SMFJ8.5A-T	SMFJ8.5CA-T	8.5A	8.5CA	8.5	9.44	10.4	1	14.4	13.9	5
SMFJ9.0A-T	SMFJ9.1CA-T	9.0A	9.0CA	9	10	11.1	1	15.4	13	3
SMFJ10A-T	SMFJ10CA-T	10A	10CA	10	11.1	12.3	1	17	11.8	1
SMFJ11A-T	SMFJ11CA-T	11A	11CA	11	12.2	13.5	1	18.2	11	1
SMFJ12A-T	SMFJ12CA-T	12A	12CA	12	13.3	14.7	1	19.9	10.1	1
SMFJ13A-T	SMFJ13CA-T	13A	13CA	13	14.4	15.9	1	21.5	9.3	1
SMFJ14A-T	SMFJ14CA-T	14A	14CA	14	15.6	17.2	1	23.2	8.6	1
SMFJ15A-T	SMFJ15CA-T	15A	15CA	15	16.7	18.5	1	24.4	8.2	1
SMFJ16A-T	SMFJ16CA-T	16A	16CA	16	17.8	19.7	1	26	7.7	1
SMFJ17A-T	SMFJ17CA-T	17A	17CA	17	18.9	20.9	1	27.6	7.2	1
SMFJ18A-T	SMFJ18CA-T	18A	18CA	18	20	22.1	1	29.2	6.8	1
SMFJ20A-T	SMFJ20CA-T	20A	20CA	20	22.2	24.5	1	32.4	6.2	1
SMFJ22A-T	SMFJ22CA-T	22A	22CA	22	24.4	26.9	1	35.5	5.6	1
SMFJ24A-T	SMFJ24CA-T	24A	24CA	24	26.7	29.5	1	38.9	5.1	1
SMFJ26A-T	SMFJ26CA-T	26A	26CA	26	28.9	31.9	1	42.1	4.8	1
SMFJ28A-T	SMFJ28CA-T	28A	28CA	28	31.1	34.4	1	45.4	4.4	1
SMFJ30A-T	SMFJ30CA-T	30A	30CA	30	33.3	36.8	1	48.4	4.1	1
SMFJ33A-T	SMFJ33CA-T	33A	33CA	33	36.7	40.6	1	53.3	3.8	1
SMFJ36A-T	SMFJ36CA-T	36A	36CA	36	40	44.2	1	58.1	3.4	1
SMFJ40A-T	SMFJ40CA-T	40A	40CA	40	44.4	49.1	1	64.5	3.1	1
SMFJ43A-T	SMFJ43CA-T	43A	43CA	43	47.8	52.8	1	69.4	2.9	1
SMFJ45A-T	SMFJ45CA-T	45A	45CA	45	50	55.3	1	72.7	2.8	1
SMFJ48A-T	SMFJ48CA-T	48A	48CA	48	53.3	58.9	1	77.4	2.6	1

Part Number		Device Marking Code		Reverse Stand off Voltage VR	Breakdown Voltage VBR(Volts) @ IT		Test Current IT	Maximum Clamping Voltage VC @ IPP	Maximum Peak Pulse Current IPP	Maximum Reverse Leakage IR @ VR
UNI	BI	UNI	BI	(Volts)	MIN	MAX	(mA)	(Volts)	(A)	(μA)
SMFJ51A-T	SMFJ51CA-T	51A	51CA	51	56.7	62.7	1	82.4	2.4	1
SMFJ54A-T	SMFJ54CA-T	54A	54CA	54	60	66.3	1	87.1	2.3	1
SMFJ58A-T	SMFJ58CA-T	58A	58CA	58	64.4	71.2	1	93.6	2.1	1
SMFJ60A-T	SMFJ60CA-T	60A	60CA	60	66.7	73.7	1	96.8	2.1	1
SMFJ64A-T	SMFJ64CA-T	64A	64CA	64	71.1	78.6	1	103	1.9	1
SMFJ70A-T	SMFJ70CA-T	70A	70CA	70	77.8	86	1	113	1.8	1
SMFJ75A-T	SMFJ75CA-T	75A	75CA	75	83.3	92.1	1	121	1.7	1
SMFJ78A-T	SMFJ78CA-T	78A	78CA	78	86.7	95.8	1	126	1.6	1
SMFJ85A-T	SMFJ85CA-T	85A	85CA	85	94.4	104	1	137	1.5	1
SMFJ90A-T	SMFJ90CA-T	90A	90CA	90	100	111	1	146	1.4	1
SMFJ100A-T	SMFJ100CA-T	100A	100CA	100	111	123	1	162	1.2	1
SMFJ110A-T	SMFJ110CA-T	110A	110CA	110	122	135	1	177	1.1	1
SMFJ120A-T	SMFJ120CA-T	120A	120CA	120	133	147	1	193	1	1
SMFJ130A-T	SMFJ130CA-T	130A	130CA	130	144	159	1	209	1	1
SMFJ150A-T	SMFJ150CA-T	150A	150CA	150	167	185	1	243	0.8	1
SMFJ160A-T	SMFJ160CA-T	160A	160CA	160	178	197	1	259	0.8	1
SMFJ170A-T	SMFJ170CA-T	170A	170CA	170	189	209	1	275	0.7	1
SMFJ180A-T	SMFJ180CA-T	180A	180CA	180	201	222	1	292	0.7	1
SMFJ190A-T	SMFJ190CA-T	190A	190CA	190	211	233	1	306	0.7	1
SMFJ200A-T	SMFJ200CA-T	200A	200CA	200	224	247	1	324	0.6	1
SMFJ220A-T	SMFJ220CA-T	220A	220CA	220	246	272	1	356	0.5	1

※For Bi-directional type having VRWM of 10 Volts and less, the IR limit is double

1. A transient suppressor is normally selected according to the working peak reverse voltage (VRWM), which should be equal to or greater than the DC or continuous peak operating voltage level.
2. VBR measured at pulse test current IT at an ambient temperature of 25°C.
3. Surge current waveform per Figure 1 and derate per Figure 3.

4. Typical Characteristics

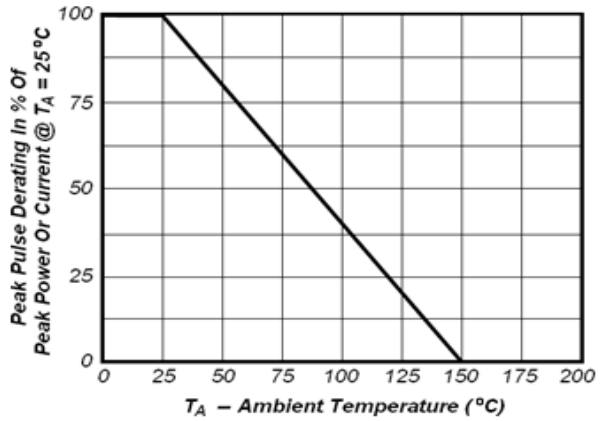

Fig1. Pulse Dearting Curve

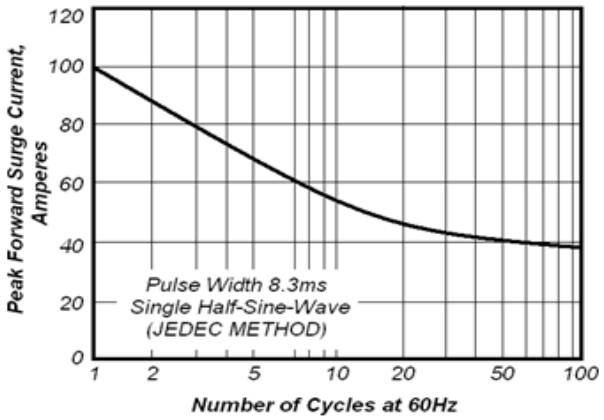

Fig2. Maximum Non-Repetitive Peak Forward Surge Current

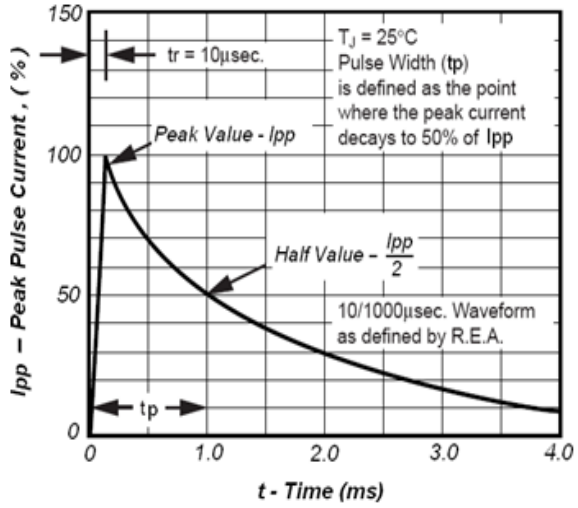

Fig3. Pulse Waveform

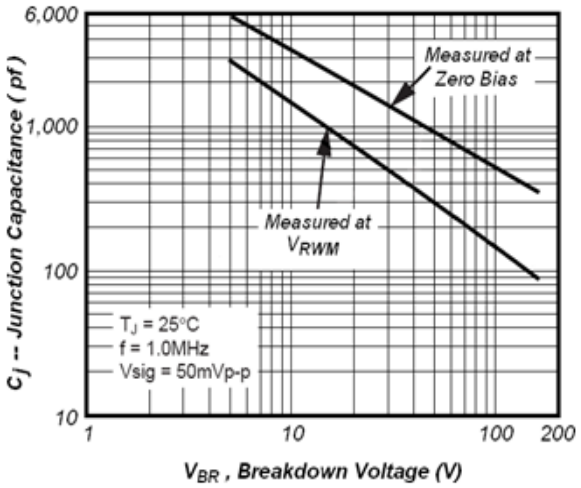

Fig4. Typical Junction Capacitance

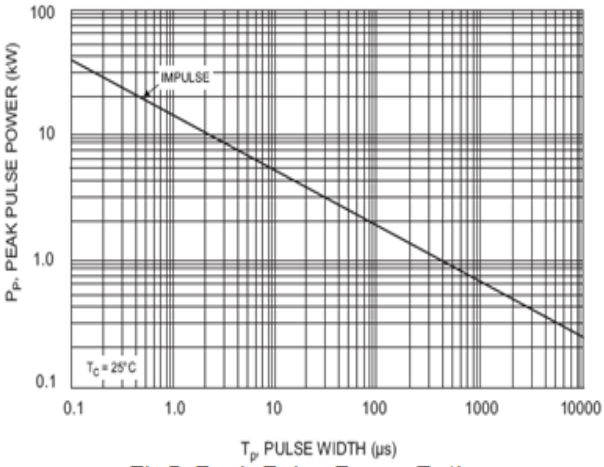

Fig5. Peak Pulse Power Rating curve

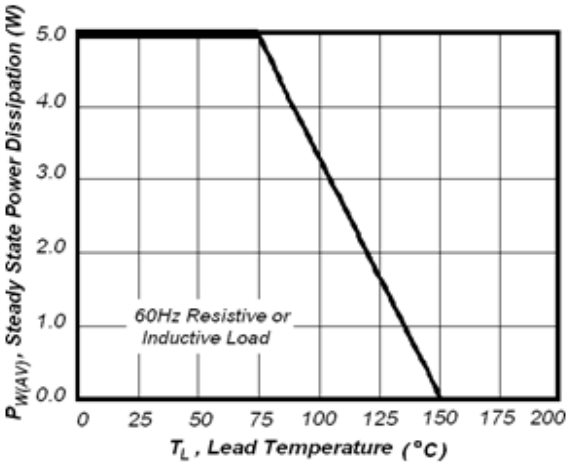

Fig6. Steady State Power Derating Curv

5. Reflow soldering

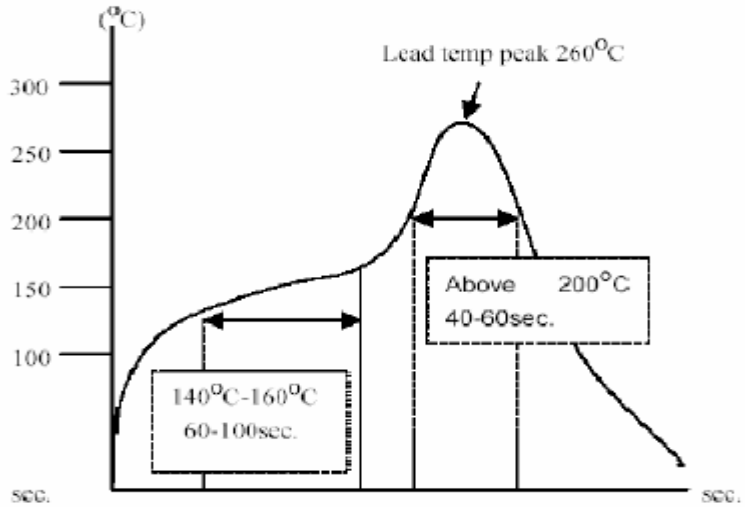

6. Dimension

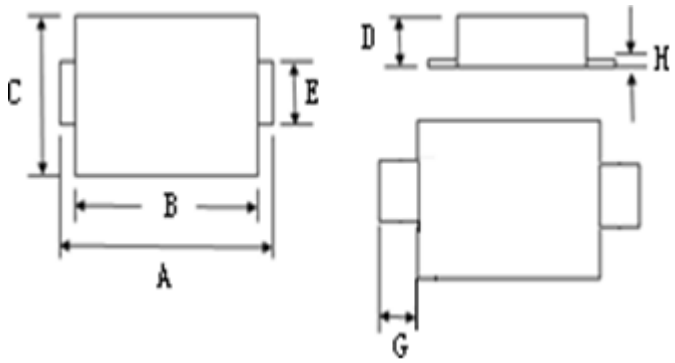

Dim	Millimeters		Inches	
	Min	Max	Min	Max
A	3.3	3.85	0.13	0.15
B	2.3	2.85	0.09	0.112
C	1.4	1.9	0.055	0.075
D	0	1.35	0.035	0.053
E	0.5	1.2	0.02	0.047
G	0.55		0.02	
H	0.2		0.008	

7. Carrier tape size

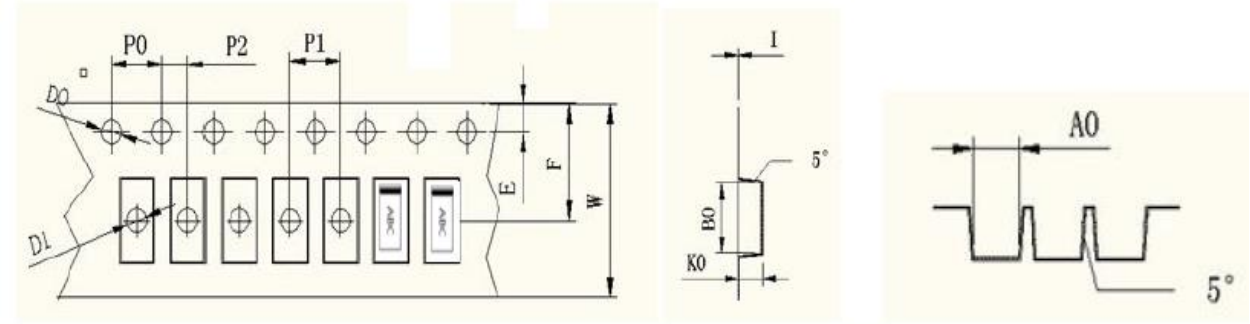

SYMBOL	W	E	F	DO	D1	PO
mm	8.00±0.10	1.75±0.10	3.50±0.05	1.55±0.05	1.10±0.10	4.00±0.10
SYMBOL	P1	P2	A0	B0	KO	I
mm	4.00±0.10	2.00±0.05	2.05±0.10	3.80±0.10	1.25±0.05	0.2±0.02

8. Marking Code

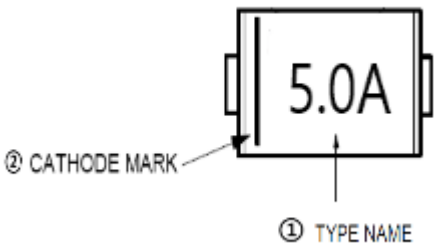

1. TYPE NAME (By Device Marking Code)
2. CATHODE MARK (For Uni-direction Products Only)

9. PACKING

Part Number	Quantity	Packaging Option
SMFJ-T Series	3000pcs/reel	tape/7”reel